Instructions for use

HOME DELUXE
WIR MACHEN DEIN ZUHAUSE

COSMOS crib with drawer

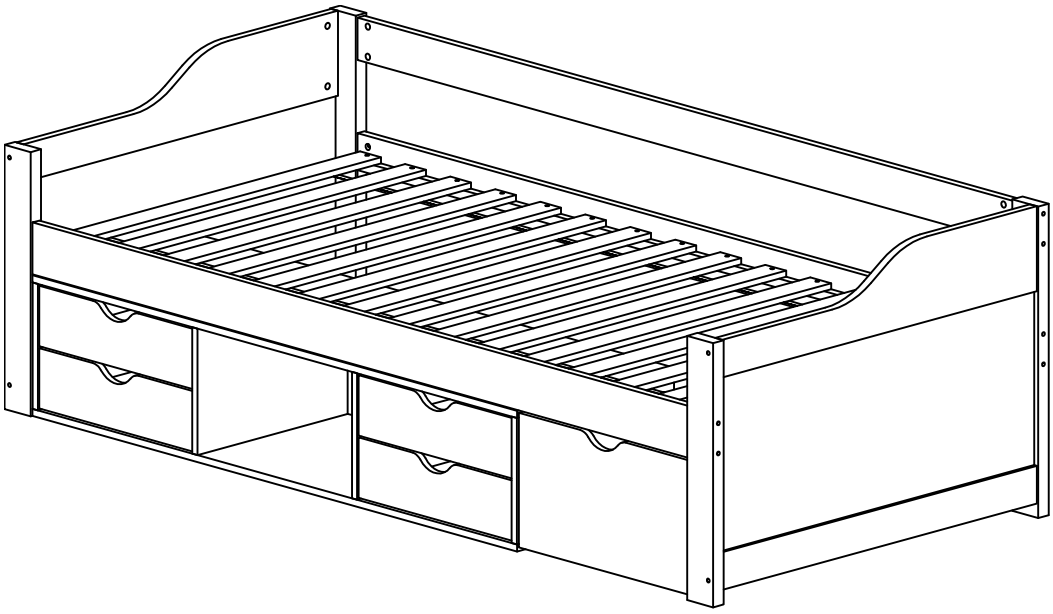

Designed in Germany

IMPORTANT:
KEEP FOR FUTURE REFERENCE.
READ CAREFULLY!

Table of contents

1. General information ... 3
1.1. Product overview ... 3
1.2. General notes ... 3
1.3. Warranty ... 3
2. Information on the instructions for use ... 4
2.1. Availability of the instructions for use ... 4
2.2. Target groups of the instructions for use ... 4
2.3. Information on the translation ... 4
2.4. Explanation of symbols ... 4
2.5. General information on the instructions for use ... 5
2.6. Intended use ... 5
2.7. General safety instructions ... 5
3. Product features ... 6
3.1. Technical data ... 6
4. Scope of delivery ... 6
5. Assembly ... 10
5.1. Safety instructions ... 10
5.2. Structure of the product ... 10
6. Application ... 18
6.1. Safety instructions ... 18
6.2. Initial commissioning ... 18
6.3. Operation ... 18
7. Troubleshooting ... 18
8. Maintenance and care ... 19
8.1. Safety instructions ... 19
9. Dismantling ... 19
9.1. Safety instructions ... 19
10. Waste disposal ... 19

10.1. General information 19

Dear customer,

Thank you for choosing a product from **Home Deluxe GmbH**. We hope you enjoy your new COSMOS crib with drawer.

The instructions for use support you during installation, commissioning, operation and maintenance of the product. The instructions for use and the safety instructions must be read carefully and in full. Observe these instructions to avoid danger.

1. General information

1.1. Product overview

COSMOS	**Article ID / Variant ID: Gray**	**Article ID / Variant ID: White**
90 x 200 cm	**21566 / 51319**	**21567 / 51320**
COSMOS with mattress	**Article ID / Variant ID: Gray**	**Article ID / Variant ID: Gray**
90 x 200 cm	**21588 / 51354**	**21589 / 51355**

1.2. General notes

In order to meet our standards, we are constantly improving quality, simplifying installation and operation and adapting products to customer requirements. Due to these changes, the current version of the instructions for use can be found on our homepage.

The term "product" is used in the instructions for use for the "COSMOS with drawer" crib.

1.3. Warranty

The statutory liability for defects and warranty rights apply from the date of purchase.
Home Deluxe GmbH accepts no liability for damage caused by non-compliance with the instructions for use. Complaints arising from improper installation or use are excluded from the warranty. In the event of defects in the product, please contact our customer service in writing via the contact form on our homepage, stating the product name, serial number and a photo of the type plate:

Home Deluxe GmbH
Schanzeweg 2
32312 Lübbecke
Germany
Tel: +49 (0)5743 6181-0
www.home-deluxe-gmbh.de

If you have any further questions, please contact our customer service team using the contact form.

2. Information on the instructions for use

2.1. Availability of the instructions for use

The instructions for use are part of the product and should be kept complete and in the immediate vicinity of the product.

2.2. Target groups of the instructions for use

The instructions for use must be read and observed by every person involved in one of the following activities or uses:

- Unpacking
- Assembly / Installation
- Commissioning / Operation
- Maintenance / inspection / care
- Troubleshooting / repair
- Waste disposal

2.3. Information on the translation

The original instructions for use were written in German. Any other language available is a translation of the German version.

2.4. Explanation of symbols

Icon	Explanation of symbols
	**WARNING** The symbol indicates possible dangers that could result in fatal or serious injuries. Before carrying out the corresponding installation or application step, read the corresponding note.
	**INFO** The symbol provides important information and indicates material damage. Observe these before carrying out the corresponding installation or application step in order to understand problems and avoid damage.
	**CE marking** The symbol declares the conformity of the product with the applicable requirements of the European Community. The current declaration of conformity is available on request from Home Deluxe GmbH.
	**For indoor use only** The symbol indicates that the product may only be used indoors.
	**Read instructions for use** The symbol indicates that the operating instructions must be read carefully before mounting/installing and/or operating the appliance.

2.5. General information on the instructions for use

The instructions for use refer to the COSMOS crib with drawer. It contains important information on assembly, operation, maintenance and cleaning. The instructions for use, in particular the safety instructions, must be read carefully before using the product; keep the instructions for use in a safe place. Only use the product as described in these instructions for use to avoid accidental injury or damage. If you pass the COSMOS crib with drawer on to a third party, these instructions for use must also be handed over.

2.6. Intended use

The product is of high quality, durable and intended or suitable exclusively for private use to a reasonable and customary extent. Furthermore, our product is **not** intended for commercial use. Commercial use is only permitted with the written consent of Home Deluxe GmbH. The product is intended as a bed (sleeping accommodation) for indoor use.

Only use the product as described in these instructions for use. Any other use is considered improper and may result in damage to property or personal injury. The manufacturer accepts no liability for damage caused by improper or incorrect use.

2.7. General safety instructions

General hazard warnings



- Improper handling can lead to considerable personal injury and damage to property. For this reason, assembly, installation, commissioning, troubleshooting, maintenance and repair work may only be carried out by qualified persons.
- The product can be used by children aged from 8 years and above and persons with reduced physical, sensory or mental capabilities or lack of experience and knowledge if they have been given supervision or instruction concerning use of the appliance in a safe way and understand the hazards involved.
- **Only** install the product if the scope of delivery is complete and in perfect condition.
- Ensure that all parts are undamaged and correctly installed. There is a risk of injury if they are not installed correctly. Damaged parts can affect safety and function.
- Only place the product on a safe, level and firm surface.
- Do not make any changes to the product.

Danger for children



- Keep children away from packaging materials. There is a risk of suffocation!
- Keep children away from the product.
- Keep children away from the assembly site while the product is being assembled. The scope of delivery contains small parts that can be swallowed or cause serious injury.
- Children can injure themselves when playing with the product or when pulling up on the product.
- Do not place the product directly or in the immediate vicinity of a play area.
- Explain to the children how to use the product correctly and never leave them unsupervised while playing.
- Explain to the children how to handle the product correctly.
- Make sure that small children do not put small parts in their mouths.

Risk of injury

Improper handling of the product can lead to injuries



- Check the product for visible damage before each use.
- Do not make any design changes to the product. Any modifications must be authorized in writing by the manufacturer and carried out in accordance with the instructions.
- If the product is damaged, it must no longer be used. Damaged parts must be repaired or replaced with original spare parts.
- Ensure that the product is installed in a permanently stable manner to avoid injury.

Risk of damage



- Improper handling of the product can lead to damage.
- Do not open the packaging with sharp objects (e.g. knives, scissors or similar) as this may damage the product. Be careful when opening.
- If you open the packaging carelessly with a knife or other sharp objects, the product may be damaged. Be very careful when opening.
- Do not use the product near sources of heat or naked flames.

3. Product features

3.1. Technical data

COSMOS	Dimensions (W x L x H)	Drawer dimensions (L x W)	Large drawer dimensions (L x W)	Weight	max. Load capacity
90 x 200 cm	96 x 204.6 x 66 cm	44.2 x 26.8 cm	60 cm depth	33.5 kg	120 kg

4. Scope of delivery

Check the packaging for external damage on delivery. Furthermore, immediately after unpacking, check that the scope of delivery is complete and that the product and all components are in perfect condition. Only assemble the product if the scope of delivery is complete and undamaged.

No.	Description	Quantity	Illustration
1	Rear bottom bed frame	1	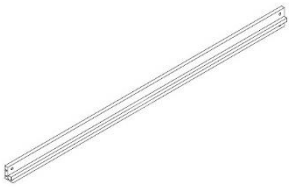
2	Rear top bed frame	1	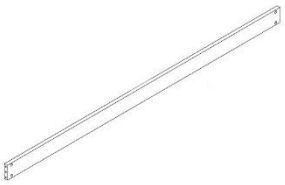

No.	Description	Quan-tity	Illustration
3	Side frame top left	1	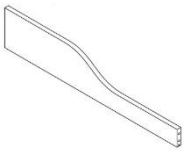
4	Side frame top right	1	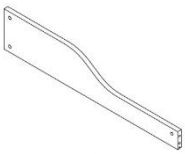
5	Bottom side frame	2	
6	Corner frame front left	1	
7	Rear left corner frame	1	
8	Corner frame front right	1	
9	Corner frame rear right	1	
10	Side frame	2	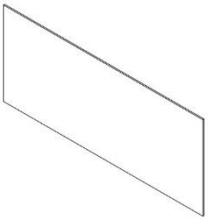

No.	Description	Quan-tity	Illustration
11	Drawer cover top bottom	2	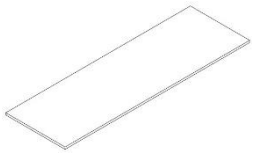
12	Exterior drawer partition	2	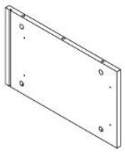
13	Center drawer partition	2	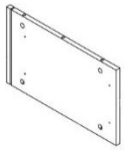
14	Rear drawer partition	3	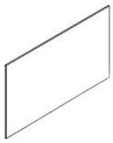
15	Drawer front (large drawer)	1	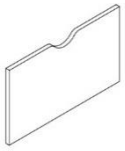
16	Drawer side panel left (large drawer)	1	
17	Drawer side panel on the right (large drawer)	1	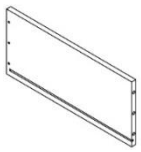
18	Rear drawer (large drawer)	1	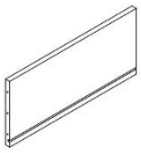
19	Drawer base (large drawer)	1	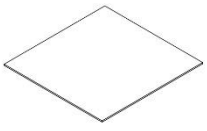
20	Drawer front (small drawer)	4	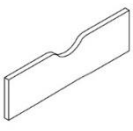

No.	Description	Quantity	Illustration
21	Drawer side panel left (no drawer)	4	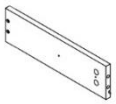
22	Drawer side panel on the right (small drawer)	4	
23	Rear drawer (small drawer)	4	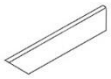
24	Drawer bottom (small drawer)	4	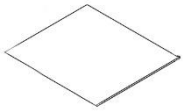
25	Drawer unit	2	
26	Front bed frame	1	
27	Slatted frame	15	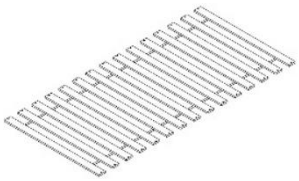
A	M6 x 70 screw	10	
B	M6 x 120 screw	12	
C	Connector Ø10 x 13	22	
D	Dowel Ø 8 x 30	32	
E	Telescopic rail	4	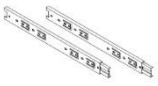
E2	Telescopic rail	4	
F	Rollers	4	
G	Screw Ø 3.5 x 14	40	
H	Bolt (H1)	20	
H	Furniture connector (H2)	20	

No.	Description	Quantity	Illustration
J	Screw Ø 4 x 25	56	
K1	Allen key	1	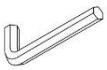
K2	Allen key	1	
L	Screw Ø 5 x 38	24	
M	Cover Ø 30	6	

5. Assembly

5.1. Safety instructions

All health and safety information must be read.

Risk of injury
Improper handling during installation can lead to injuries



- Your product will be delivered in several packages. Please make sure that the packages are opened at the top. Be very careful when opening the parcels as there are fragile parts in the parcels.
- Avoid damp or heavily soiled rooms as installation locations.
- Only place the product on a safe, level and firm surface that can withstand the load permanently.
- Operating errors, assembly errors or damage caused by assembly are excluded from the warranty.
- At least 2 people are required to assemble the product.
- Wear protective clothing such as safety shoes and protective gloves during assembly.

5.2. Structure of the product

The product is delivered disassembled and can be assembled with little effort. Follow the assembly instructions carefully. If the instructions are not followed, the function and safety of the product cannot be guaranteed.

Tools required

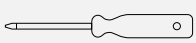	Screwdriver		Measuring tape
	Pencil	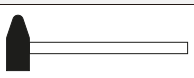	Hammer
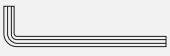	Allen key		Cutter knife

- The following instructions must be read carefully.
- The accessories are located in the head section of the product.

Illustration	Description

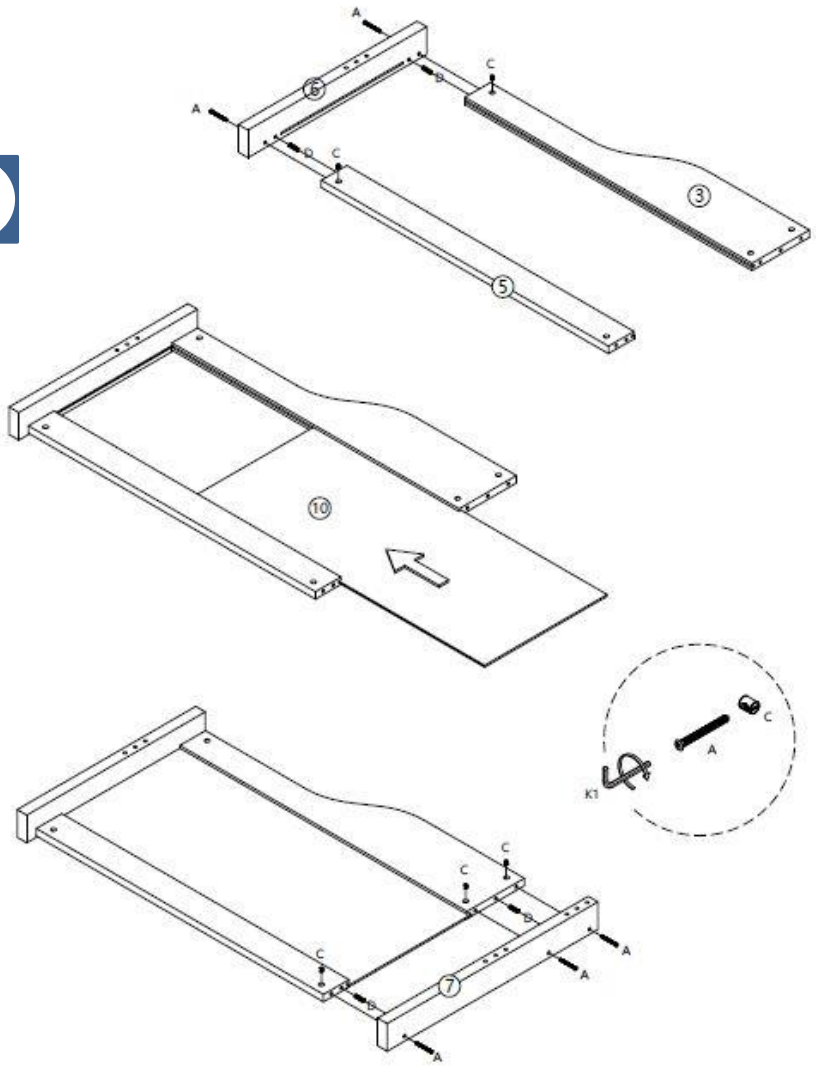

A	M6 x 70	5
C	Φ10 x 13	5
D	Φ8 x 30	4

Assembly step 1

- Fit the front left corner frame (**6**), top left side frame (**3**) and bottom side frame (**5**) using the screws (**A**), connector (**C**) and dowels (**D**).
- Slide the side frame (**10)** into the groove.
- Screw the rear left corner frame (**7**) to the already assembled components (**3, 5, 6**).

Illustration	Description

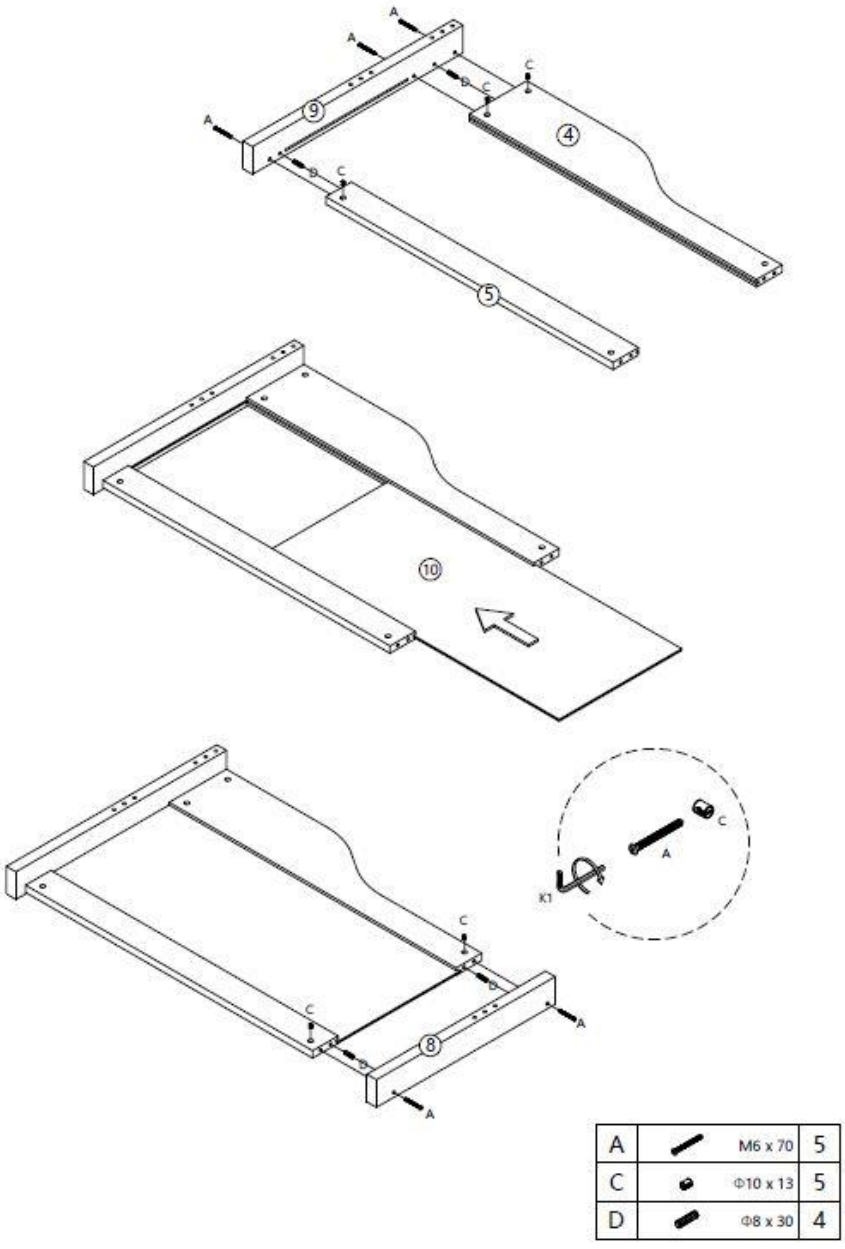

A	M6 x 70	5
C	Φ10 x 13	5
D	Φ8 x 30	4

Assembly step 2

- Fit the corner frame at the back right (**9**), side frame top right (**4**) and side frame bottom (**5**) with the screws (**A**), connector (**C**) and dowels (**D**).
- Slide the side frame (**10)** into the groove.
- Screw the corner frame at the front right (**8**) to the already assembled components (**4, 5, 9**).

Illustration	Description
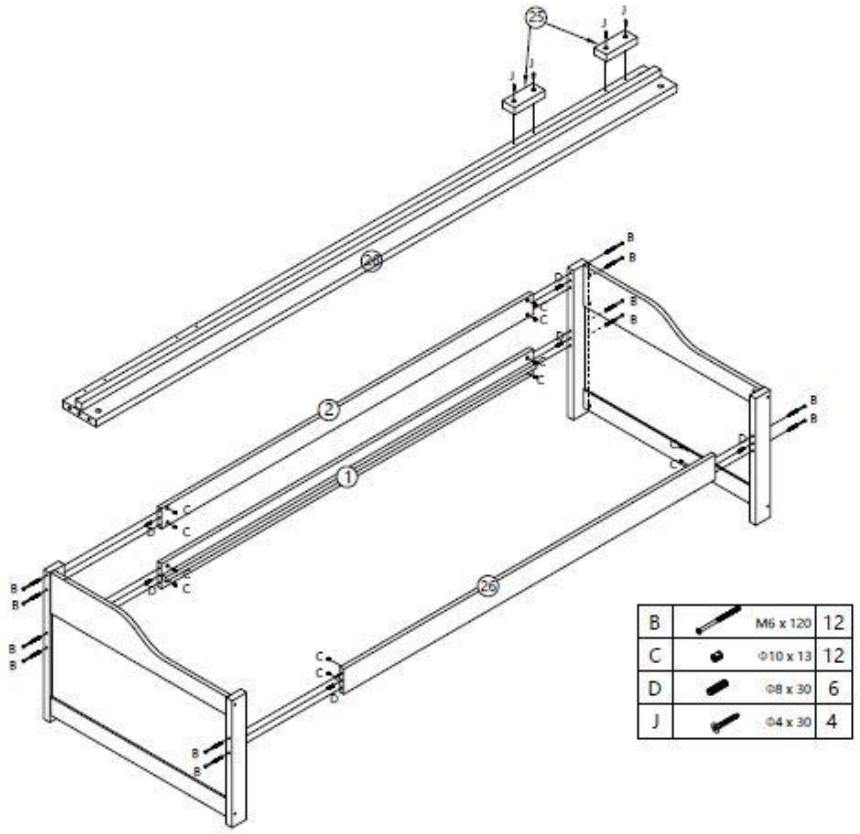	**Assembly step 3** - Mount the front rear bed frame (**1**) and rear top bed frame (**2)** to the side frames of the bed u-sing the screws (**B**), connectors (**C**) and dowels (**D**). - Screw the dra-wer blockers (**25**) together with the screws (**J**).
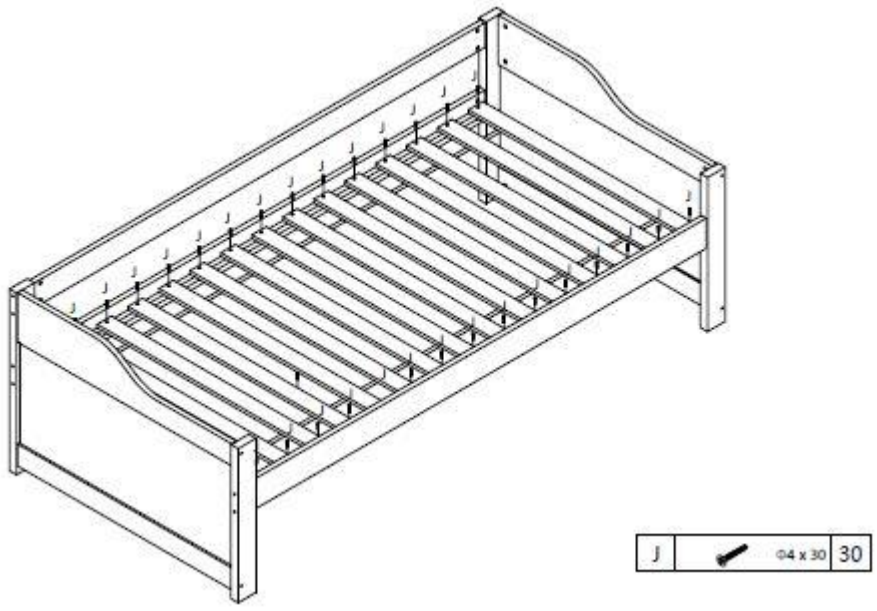	**Assembly step 4** - Insert the slatted frame and screw it in place with the screws (**J**).

Illustration	Description

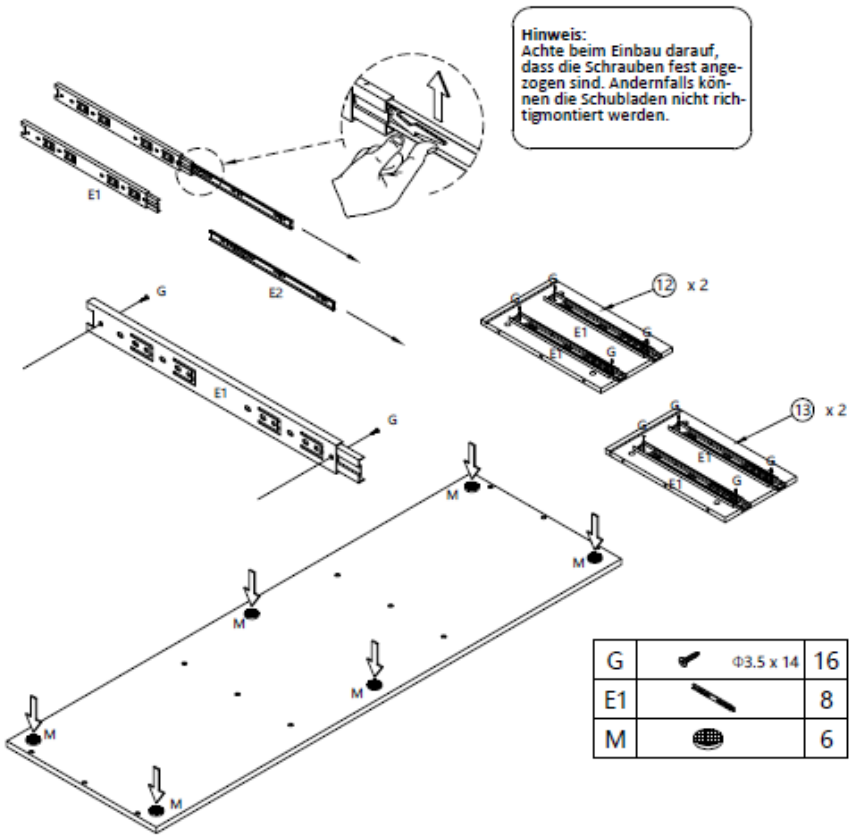

Assembly step 5

- Bring the telescopic runners (**E, E2**) together and screw them to the drawer partitions using the screws (**G**).

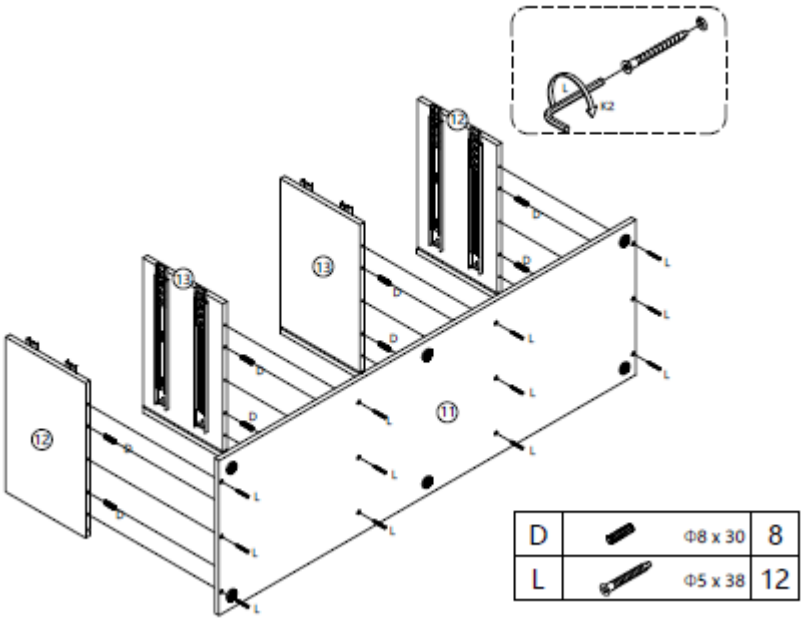

Assembly step 6

- Fasten the drawer partitions (**12, 13**) to the top bottom drawer cover (**11**) using the dowels (**D**) and screws (**H)**.

Illustration	Description
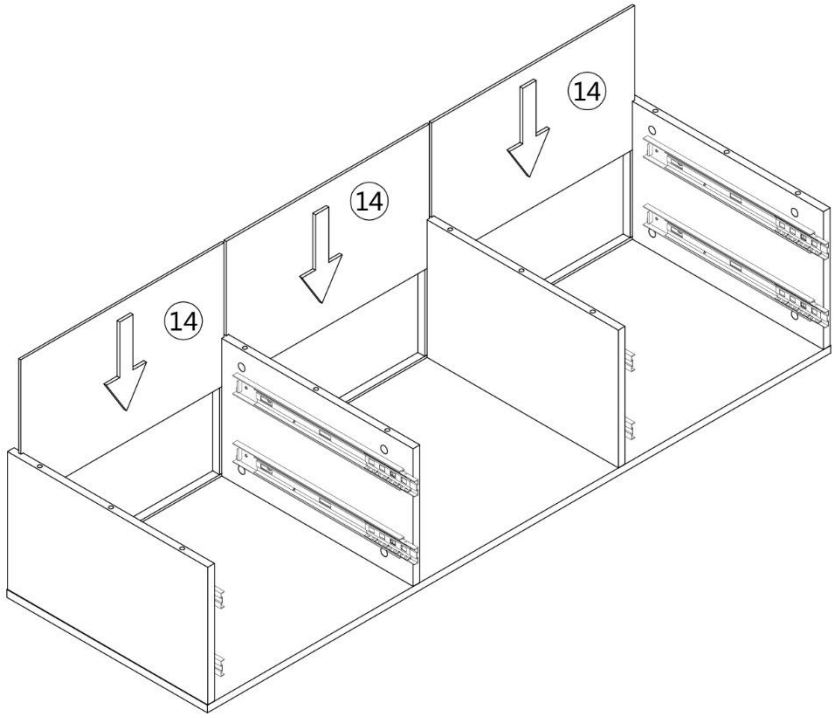	**Assembly step 7** - Slide the drawer partition at the back (**14**) into the groove.
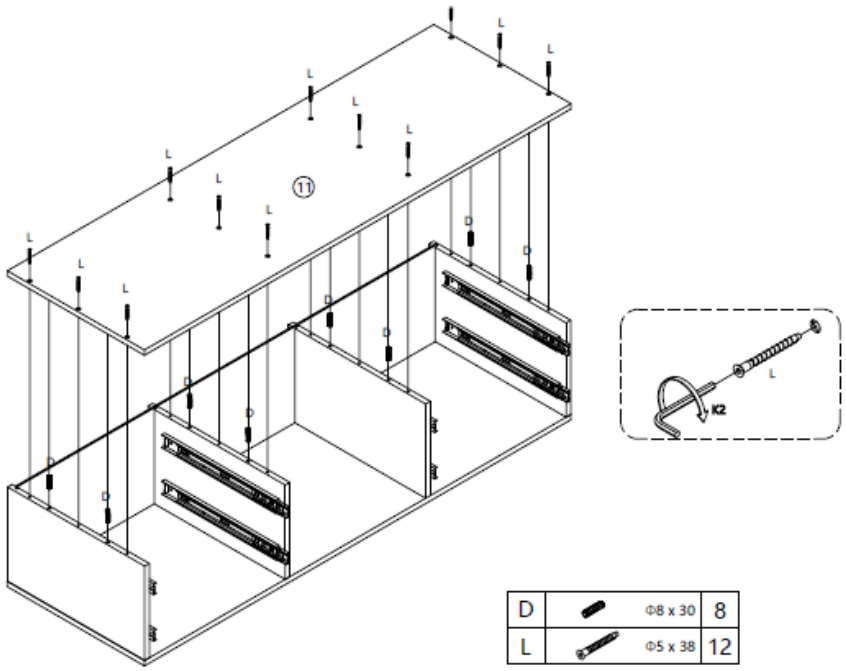	**Assembly step 8** - Screw the drawer cover tight at the bottom with the dowels (**D**) and screws (**H**).

Illustration	Description

x 4

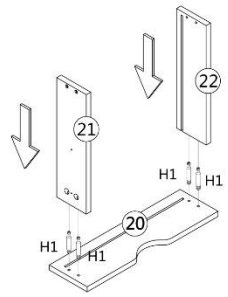

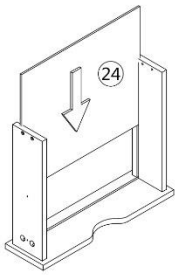

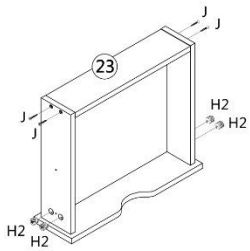

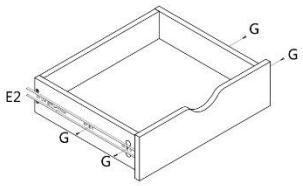

E	E2	8
G	Φ3.5 x 14	16
H	H1 H2	16
J	Φ4 x 25	16

Assembly step 9

- Assemble the small drawers (**20, 21, 22, 23, 24**).

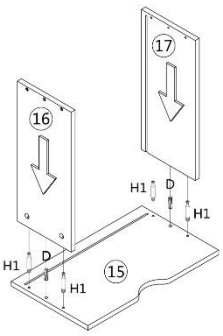

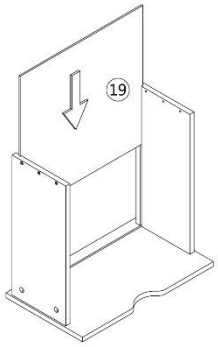

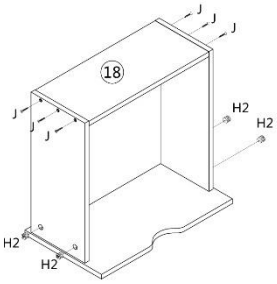

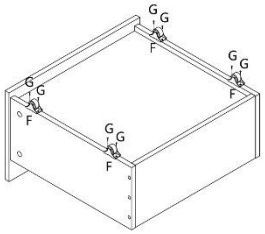

D	Φ8 x 30	2
F		4
G	Φ3.5 x 14	8
H	H1 H2	4
J	Φ4 x 25	6

Assembly step 10

- Assemble the large drawers (**15, 16, 17, 18 ,19**).

Illustration	Description
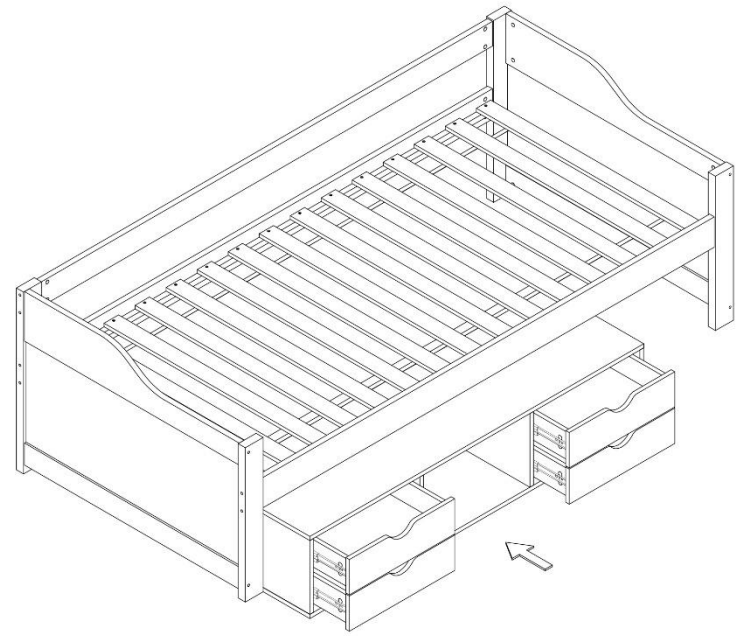 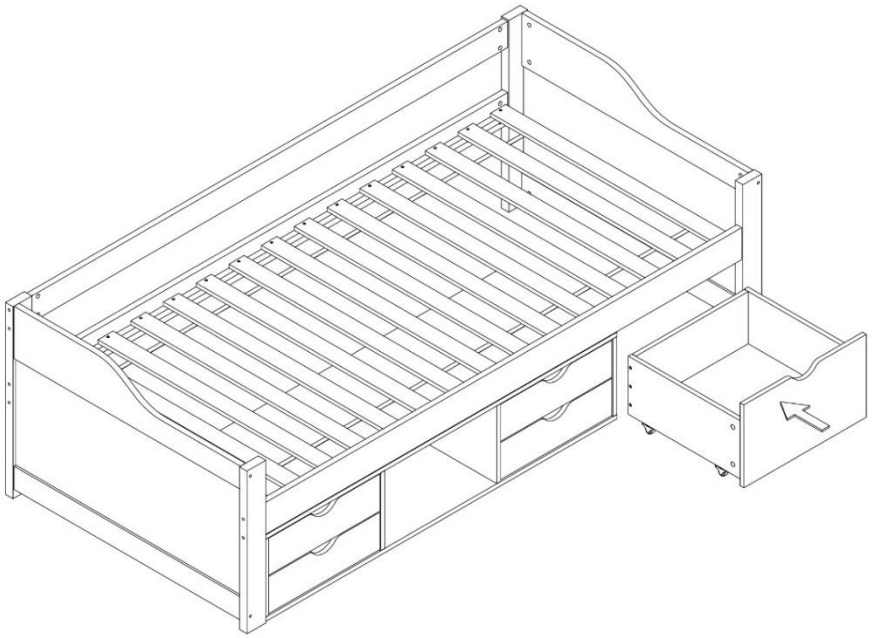	**Assembly step 11** - Slide the assembled drawers into the respective compartments.

6. Application

6.1. Safety instructions

The following health and safety information must be read carefully.

Risk of injury
Improper handling during operation can lead to injuries



- Do not use a damaged product.
- Do not make any changes to the product.
- Check the screws at regular intervals.

6.2. Initial commissioning

Check the product for damage before using it for the first time. The product may only be used if it is undamaged.

6.3. Operation

Check before using the product,

- the proper condition.

7. Troubleshooting

If the following faults occur during operation, please check the following fault causes using the following table. If the fault cannot be rectified by the measures listed, take the product out of operation.

Error	Possible cause	Solution
The product wobbles or vibrates	- The product stands on uneven surfaces - The fastening screws have come loose - The product is overloaded	- Place the product on a level surface - Tighten the fastening screws - Comply with load limits

8. Maintenance and care

8.1. Safety instructions

Risk of injury
Improper handling during operation can lead to injuries



- Our crib is extremely easy to clean and we recommend cleaning the surface only with a soft cloth or a slightly damp cloth.
- The surface is suitable for daily use and requires no additional treatment in the long term.
- In principle, all dirt and liquids (e.g. drinks) should be wiped off immediately with a slightly damp cloth.
- Cleaning and maintenance must not be carried out by children.

9. Dismantling

9.1. Safety instructions

Risk of injury
Improper handling during disassembly can lead to injuries



- The product has large dimensions, at least 2 people are required for disassembly.
- Secure the product against falling before dismantling.

Disassembly of the product must be carried out in reverse order to assembly. (**see chapter Assembly**)

10. Waste disposal

10.1. General information



- Dispose of the product and all components in accordance with local and country-specific regulations to prevent damage to the environment.
- Our packaging is made from environmentally friendly materials. They can be recycled and thus serve as valuable raw materials. Dispose of the packaging material (cardboard, dirty packaging, etc.) separately and properly in accordance with the applicable national regulations.
- Contact our customer service if you are unsure about disposal.
- You can also obtain information on proper disposal from local waste disposal centers.

Home Deluxe GmbH
Schanzeweg 2
32312 Lübbecke
Germany
Tel: +49 (0)5743 6181-0
www.home-deluxe-gmbh.de

GA-221-00_COSMOS
2024/05